01785 214242
sales@bisonmachinery.net
www.bisonmachinery.co.uk

ANTIL APR 30-6 PRESS BRAKE BENDING ROBOT

The Antil APR Press Brake Bending Robots are a versatile solution for automating bending production utilising either a new or existing press brake. Automating press brakes with an APR robot is a highly effective way of increasing productivity without limiting bending capabilities. These models offer serious advantages over traditional robot formats, being easy to program and operate, and with the gantry design, removing common limitations in handling the material. Significantly the APR robot does not require a dedicated press brake but can be parked to one side, allowing use in manual mode for single pieces or small batch work. When a production run is required the robot can be set to run automatically; either during the day or often at the end of a shift for full 'lights out' operation. As well as improving productivity the APR is also used for bending large, awkward components which would normally need two operators to handle; this brings immediate benefits in both cost savings and operator safety.

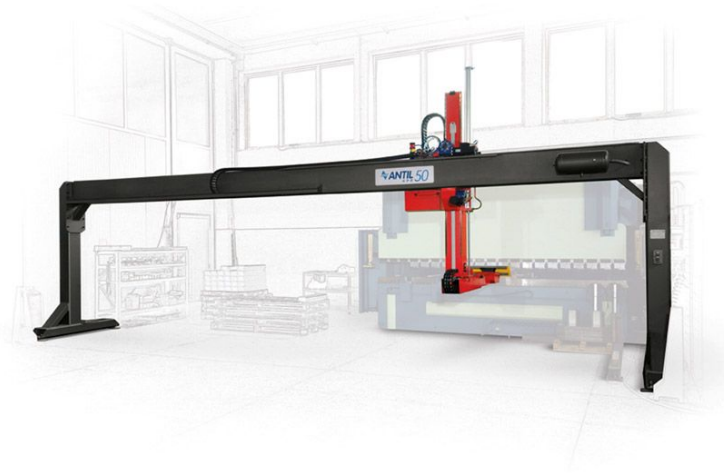

FEATURES

- Gantry style bending robot with 5-axis CNC positioning
- Precise linear axis controlling the loading, bending and unloading positions
- Bending arm with two linear axis (vertical/horizontal) and two rotational axis (tilt/rotate)
- Bending arm mounted from gantry leaving a clear working area in front of the press brake
- Material can be gripped from either above or below without conflicting with the floor or the front beam of the press brake
- Bending arm can release material once at pinch point or follow through during the bend
- Material gripping unit with suction pads
- Single sheet sensor with sheet separator system
- Handles both small complex components as well as large heavy items
- Intuitive CNC control with 'teach in and play back' programming at the machine
- Un-intrusive machine integration with sensors to back gauge fingers and bending beam which follow the programmed sequence of the press brake
- Robot can be quickly parked to use the press brake in manual mode
- Automatic switch down system to allow unattended 'lights out' production
- Side and rear fence guards with front safety light guards

OPTIONS

- Additional gripper units for different component sizes
- Swing up front machine supports, 500mm length, 15kg capacity
- Machine function alarm system with SMS text alerts
- Back gauge sensors for press brakes without powered Z-axis
- Additional pair of Z-axis sensors

TECHNICAL INFORMATION

MODEL		APR 30-6
Maximum Component Dimension	mm	1500
Weight at Wrist	kg	30
Torque at Rotation Centre	kgm	9
X Axis Travel	m	6
Y Axis Travel	mm	810
Z Axis Travel	mm	1530
Working Height under the Sliding Support	mm	2300